

STRATO FLIGHTS

STRATOlab

Experiment mount

Kit for your own experiments in the stratosphere



Table of contents

1 General information 4
1.1 Scope of delivery 4
1.2 Required tools 5

2 Installation of the experiment mount 6
2.1 Installation of the base frame 6
2.2 Installation of the test tube holder 10
2.3 Installation of the object plate 12
2.4 Installation of the object wall 13

3 Safety instructions 16
3.1 Signal words 16
3.2 Proper use 16
3.3 Dangers for children and vulnerable people 16
3.4 Packaging disposal 17

4 Checklist: are you ready? 18

5 About Stratoflights 22

1 General information

The STRATOlab Experiment mount lets you carry out experiments in the stratosphere outside the stratospheric probe, in an environment that is otherwise accessible only to NASA. With the help of the STRATOlab, you can examine the effects of the extreme conditions in the stratosphere on different substances and record the whole process with the Space Cam built into the Polystyrene probe. Additional measurement data from the Datalogger STRATO4, such as temperature, air pressure, humidity, altitude and speed, provides further information for evaluating the experiments afterwards.

1.1 Scope of delivery

The STRATOlab Experiment mount contains the following components:

- Test tube holder **(1)**
- Object plate **(2)**
- Object wall **(3)**
- 2x mounting clamps **(4)**
- 2x balsa wood sticks (45 cm) **(5)**
- 4x plastic test tubes with lid
- 8x screws
- 4x cable ties
- 2x balsa wood pieces to “balance out” the pressure



To attach the experiment mounts to the stratospheric probe, you also need the **Polystyrene probe** if you have not ordered the **Weather Balloon Kit** and are ordering the

STRATOlab Experiment mount separately. The Polystyrene probe is part of the Weather Balloon Kit and is also available separately in the shop.

Please note that the balsa wood sticks shown here have been painted black with spray paint to make them easier to see in these instructions. The sticks supplied are natural wood-coloured, and you can of course paint them yourself if you wish.

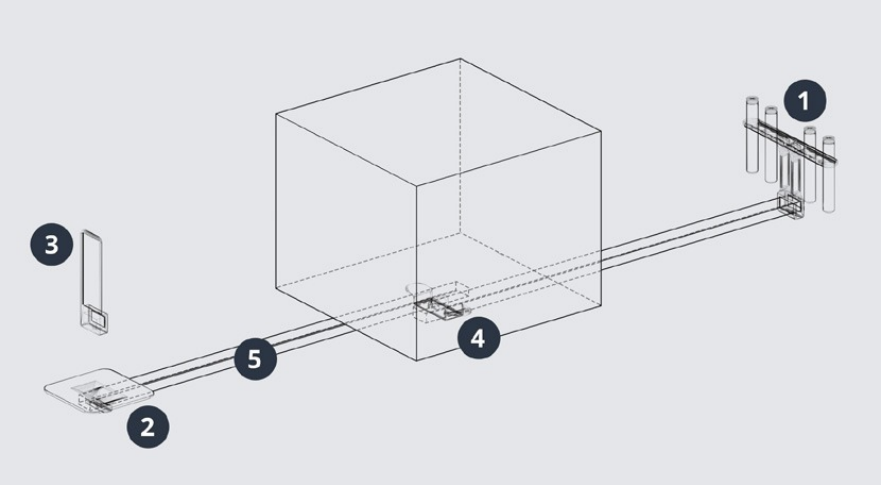

1.2 Required tools

You will need the following tools to install the STRATOlab Experiment mount:

- Phillips screwdriver
- Side cutters
- Optional: cordless screwdriver/drill
- Optional: matt black spray paint

2 Installation of the experiment mount

2.1 Installation of the base frame

To attach the experiments to the experiment mount, the mounting clamps must be fitted first. The STRATOlab Experiment mount comes with mounting clamps that allow two experiments to run in parallel. This way, one experiment on each side of the stratospheric probe can be filmed by a Space Cam, so you can do as much research as possible during one stratospheric flight.

In the following, two experimental setups are used, so both slots of the mounting clamps are occupied. Of course, you can also use just one slot of the mounting clamps, so that only one side of the stratospheric probe carries an experiment into the stratosphere.

Expert tip: If possible, you should equip both balsa wood sticks with experiments, regardless of which holders you install at the end of the balsa wood sticks. Attaching experiments to both sides prevents your probe from becoming unbalanced ("listing"), which would cause extra rotation and spoil your video footage.



First, you need the Polystyrene probe, the two mounting clamps and the two balsa wood sticks. To be able to use the supplied holders on the balsa wood sticks later, the balsa wood sticks must first be fixed below the probe. To do this, align the balsa wood sticks in the directions where the experiments will later be located. Make sure the holders sit roughly in the centre underneath the Polystyrene probe.

Now take the two mounting clamps and press the balsa wood sticks into the respective slots of the mounting clamps. For a secure hold, it is important that each balsa wood stick is held by both mounting clamps.

Expert tip: The distance between the camera lens and the object should be at least 20 cm. Otherwise, only the foreground is in focus, and the background, and with it the view of the stratosphere, will be blurred. After the installation is complete, always check that the objects and the background are sharp!





Once you have determined the right length of the balsa wood sticks for your experiment, use the corresponding holders to test it.





Fix the balsa wood sticks in the mounting clamps with the supplied screws. The screws prevent the balsa wood sticks from slipping in the slots. Each balsa wood stick must be secured with two screws. If you use two balsa wood sticks, you will therefore need four screws.

Now you can align your fixed base frame. Your goal is for the objects to appear as close to the centre of the camera image as possible. You should therefore fix the frame as centrally as possible below the Polystyrene probe. Do not worry about the offset between

the two balsa wood sticks: you can adjust the camera compartment again and align your camera on each side so that the objects are perfectly centred in the camera's field of view.





To fix the base frame in its final position, take a screwdriver and carefully pierce through the holes of the mounting clamps and the bottom of the Polystyrene probe, so that a continuous hole is made. Hold your base frame firmly so that it does not slip, because you will have to repeat this process three more times.

Once there are four holes in the Polystyrene probe and you are happy with the position of the base frame, you will need the two supplied cable ties. The cable ties are used to secure the base frame.











First, pass a cable tie from the underside of the Polystyrene probe through the hole you made earlier with the screwdriver and back out inside the probe through the adjacent hole. Now you can carefully tighten the cable tie so that the holder is firm and secure. Please note that our Polystyrene probe is made of compressed polystyrene: the cable tie can be tightened, but it is still polystyrene, and if you pull too hard you can pull the cable tie through it! That is why the supplied balsa wood pieces should be used on the other side of the cable tie to "balance out" the pressure.

Expert tip: Our Polystyrene probe is made of compressed polystyrene, so the cable ties inside the probe do not normally need to be "balanced out". If you use polystyrene sheets from a DIY store or heavier experiments, you should place the supplied small balsa wood pieces under the cable ties inside the probe so that the cable ties do not "eat" into the soft polystyrene when you tighten them.







Notice! Make sure that the base frame and the rest of the experiments are fixed in such a way that nothing can come loose and that no people or property on the ground are put at risk during the stratospheric flight!

Repeat the process with the second cable tie and check that your base frame sits as you want it. Remove the excess ends of the cable ties with the side cutters.

2.2 Installation of the test tube holder

If you want to examine liquids during your research flight, the STRATOlab Experiment mount contains a holder for four test tubes.

To install the test tube holder on the already fixed base frame, you need the test tube holder, the four test tubes, a screw and a screwdriver.

Expert tip: The red lids of the test tubes are especially important during the shaky launch, so that the liquids stay in the test tubes in windy conditions. However, bear in mind that the ambient atmospheric pressure decreases continuously during the ascent. If you use the red lids, there is therefore a risk that the lids will fly off like small "projectiles" at higher altitude because of the pressure building up inside the tubes. If this is not desired, carefully drill a small hole in each lid so that the pressure can equalise.




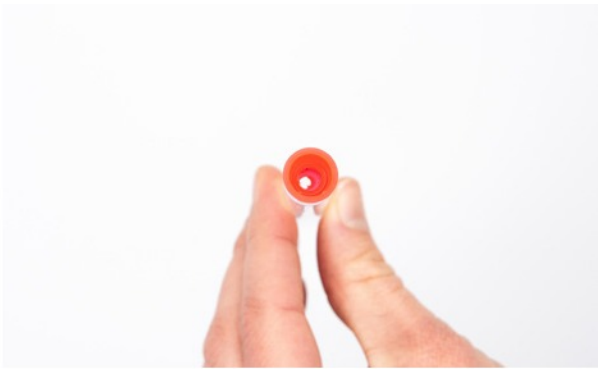

After drilling a small hole in each lid for pressure equalisation, insert the test tubes into the holder from above. The holder is tapered, so the test tubes cannot slide through. Optionally, you can also secure the test tubes with a small dot of glue from a hot glue gun, but this is not strictly necessary.

Now place the equipped test tube holder on the balsa wood stick. Check again that there is a distance of at least 20 cm between the lens of the Space Cam installed in the Polystyrene probe and the test tube holder, so that the test tubes and their surroundings are always clearly visible during your stratospheric flight.




Now use a screwdriver to fix the test tube holder with the supplied screw, tightening it carefully.






2.3 Installation of the object plate

If you want to observe small objects during your research flight, the STRATOlab Experiment mount contains an object plate.

To install the object plate on the already fixed base frame, you need the object plate, a screw and a screwdriver.

Now place the object plate on the balsa wood stick. Check again that there is a distance of at least 20 cm between the lens of the Space Cam installed in the Polystyrene probe and the object plate, so that your object and its surroundings are always clearly visible during your stratospheric flight.




Now use a screwdriver to fix the object plate with the supplied screw, tightening it carefully.





Expert tip: Use a hot glue gun or superglue to attach the objects you want to the object plate. Before you fix an object to the object plate, however, check how your chosen object reacts to hot glue or superglue.



Notice! People and property must never be put at risk! Objects must be fixed securely and, if necessary, secured to the probe with cords! Safety comes first!

2.4 Installation of the object wall

If you want to observe small, rather vertically oriented objects during your research flight, the STRATOlab Experiment mount contains an object wall.

To install the object wall on the already fixed base frame, you need the object wall, a screw and a screwdriver.

Now place the object wall on the balsa wood stick. Check again that there is a distance of at least 20 cm between the lens of the Space Cam installed in the Polystyrene probe and the object wall, or the object that will later be attached to it, so that your object and its surroundings are always clearly visible during your stratospheric flight.





Now use a screwdriver to fix the object wall with the supplied screw, tightening it carefully.



Expert tip: Use a hot glue gun or superglue to attach the objects you want to the object wall. Before you fix an object to the object wall, however, check how your chosen object reacts to hot glue or superglue.





Notice! People and property must never be put at risk! Objects must be fixed securely and, if necessary, secured to the probe with cords! Safety comes first!

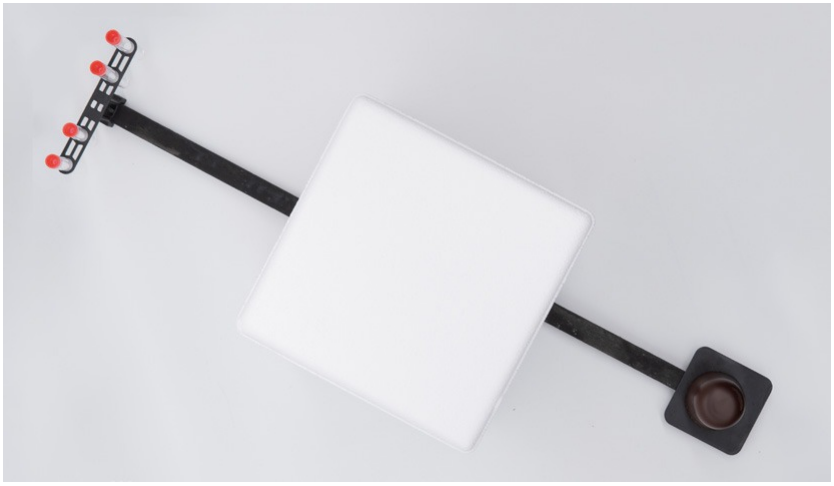

3 Safety instructions

Please be sure to observe the following safety instructions regarding the product. Please also observe the additional safety instructions for preparing and carrying out a stratospheric flight!

3.1 Signal words

The following signal words are used in these instructions:

- **WARNING:** Indicates a hazard with a medium level of risk. Ignoring the warning can result in serious injury.
- **Notice!** Warns of possible material damage.
- **Expert tip:** These come from our own experience of 10 years and over 1,000 stratospheric flights! Stratoflights does not guarantee or assume any liability for the expert tips given here.

3.2 Proper use

Read these safety instructions for the STRATOlab Experiment mount carefully before use so that you can use it properly. Proper use means using the STRATOlab Experiment mount only as described in these instructions and exclusively for experiments in the stratosphere. All objects and holders must be properly secured so that people and property are not harmed!

Notice! The manufacturer and dealer accept no liability for damage caused by improper or incorrect use.

3.3 Dangers for children and vulnerable people

Do not allow the STRATOlab Experiment mount to be used by people (including children) with limited physical, sensory or mental abilities, unless a person responsible for their safety has first given them instructions on how to use it. Make sure that small parts (e.g. accessories) are not played with; they can be swallowed and cause suffocation. Please therefore explain the hazards and correct use of the STRATOlab Experiment mount to your child. The STRATOlab Experiment mount is not a toy.

3.4 Packaging disposal

Dispose of all packaging material separately by type. Put paper, cardboard and board into the waste paper, and foils into the recycling collection.

4 Checklist: are you ready?

You will need the following for a successful stratospheric mission:

☐	§	**Ascent permit**	To launch your weather balloon, you need an ascent permit in your country. Use our weather balloon registration for this.	→
☐		**Battery pack**	At temperatures as low as −65 °C, the camera's internal battery will not last for the entire flight time. You will need a battery pack so that your entire stratospheric flight can be filmed.	→
☐		**Parachute 800**	For your payload to float gently and safely back to Earth, you need a parachute. The Parachute 800 is designed for payloads up to 800 g.	→
☐		**Parachute 2500**	For heavier payloads you need a bigger parachute. The Parachute 2500 is ideal for payloads weighing more than 800 g.	→
☐		**Pressure reducer for helium**	To fill your weather balloon with the calculated amount of helium/balloon gas from the gas cylinder, you need a pressure reducer for helium. It lets you fill exactly the calculated amount.	→
☐		**Suitable launch site**	Launch sites such as meadows, parks or your own property that are not in the immediate vicinity of flagpoles or tall buildings.	→

☐		**GPS tracker STRATOfinder**	The STRATOfinder transmits the landing location of your stratospheric probe to within 5 metres. With the help of the Stratoflights app, you can integrate the STRATOfinder into the app and view the current position data.	→
☐		**Gloves**	So that the sensitive envelope of the weather balloon is not “damaged”, all team members working on the weather balloon should wear gloves and take off rings, earrings, etc. Please avoid contact with the ground!	→
☐		**Helium/balloon gas**	Helium/balloon gas creates lift. It is available from gas dealers in your region or from larger DIY stores. For the calculation you can use our helium calculator in the tutorial/Stratoflights app.	→
☐		**Aviation liability insurance**	To obtain the ascent permit, you need aviation owner liability insurance. You can find more information about this in the tutorial.	→
☐		**Space Cam**	A reliable camera for extreme conditions. Many cameras and action cams from well-known manufacturers have problems with the conditions in the stratosphere. The Space Cam is reliable and takes great pictures.	→
☐		**Special cord**	Most countries in the EU require a maximum breaking strength of 230 N under the SERA regulation, which forms the legal basis for weather balloon launches. The special cord meets these official criteria.	→
☐		**Polystyrene probe**	Your equipment must be protected from the extreme conditions to avoid failures. The Polystyrene probe offers enough space and reliably protects against extreme temperatures down to −65 °C.	→
☐		**Tesa fabric tape**	To close your probe and your weather balloon, you need reliable adhesive tape. Tesa fabric tape is well suited for this.	→

☐		**Backup GPS tracker**	A second STRATOfinder or SPOT Trace can be useful as a backup GPS tracker, to give you the greatest possible safety.	→
☐		**Datalogger STRATO4**	In addition to GPS position, flight altitude and speed, the STRATO4 also records temperature, air pressure, humidity and much more, so that the whole stratospheric flight can be analysed in full.	→
☐		**SPOT Trace**	If you want a live position, or a landing at sea is not unlikely, the SPOT Trace GPS tracker is the perfect choice for a successful stratospheric flight.	→
☐		**Teaching unit: Stratosphere flight**	A teaching unit specially for the stratosphere! Worksheets and solution sheets for 11 double lessons, valuable information for preparation and help at every stage of a school project.	→
☐		**Weather Balloon Guide**	With over 80 pages, numerous pictures and expert tips, this guide helps every mission into the stratosphere succeed. That is a promise!	→

☐		**Cutter knife / scissors**	A useful tool for preparing your probe and for carefully opening the weather balloon box.	→
☐		**Wrench for the pressure reducer**	The gas cylinder for the helium/balloon gas is closed with a screwed-on cap. The pressure reducer for helium must also be attached.	→

☐		**Side cutters**	Useful for removing the excess ends of the cable ties.	→
☐		**Stratoflights app**	Your loyal companion in your pocket: checklist, all tools and information at hand from the start!	→

5 About Stratoflights

We hope that our STRATOlab Experiment mount and our other free services, such as the Stratoflights app and the tutorials and videos on our homepage, have been helpful to you, and that you will experience an extraordinary adventure and be rewarded with sensational pictures of the blue of our planet.
We always welcome suggestions, constructive feedback and reviews of our products in the online shop.
We would also like to take this opportunity to point out that this project is ideal as a school project, since all the natural-science disciplines are part of the overall project, and students not only learn science theory and practice but also gain a real learning experience through the stratospheric flight.
Thank you again for your trust in us and our products! We would be very happy if you recommend this project.

Your Stratoflights team

Follow us on Instagram, Facebook and YouTube
and tag us in your project!





www.stratoflights.com